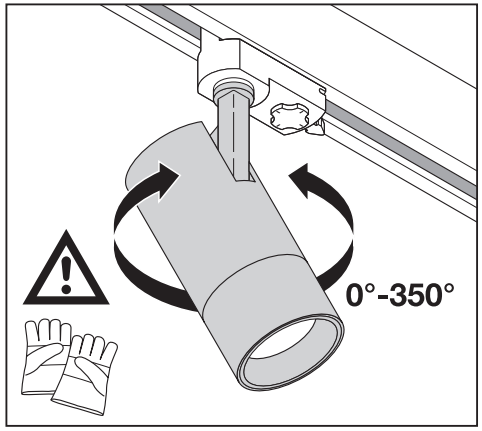

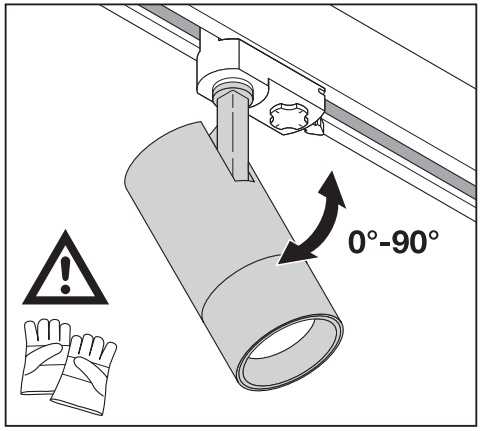

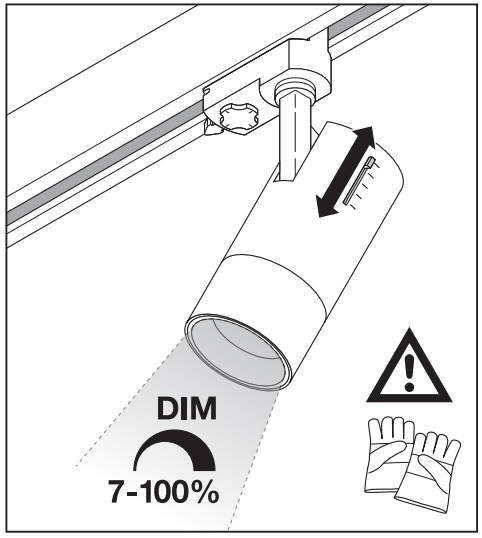

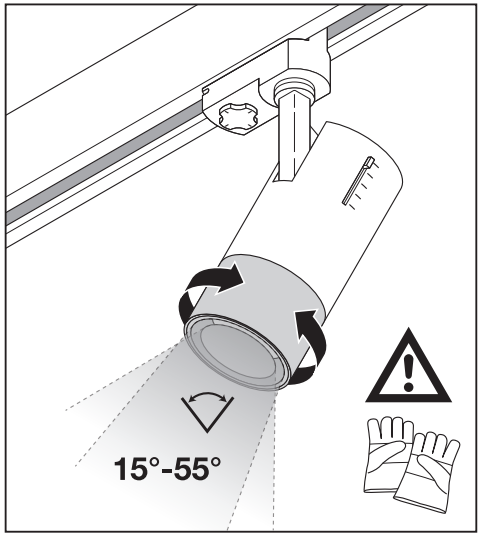

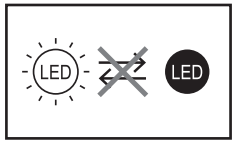

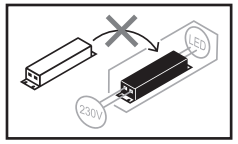

C10449057
G11075401V2
24.03.21

LEDVANCE GmbH
Steinerne Furt 62
86167 Augsburg, Germany
www.ledvance.com

LEDVANCE

TRACKLIGHT SPOT ZOOM D85

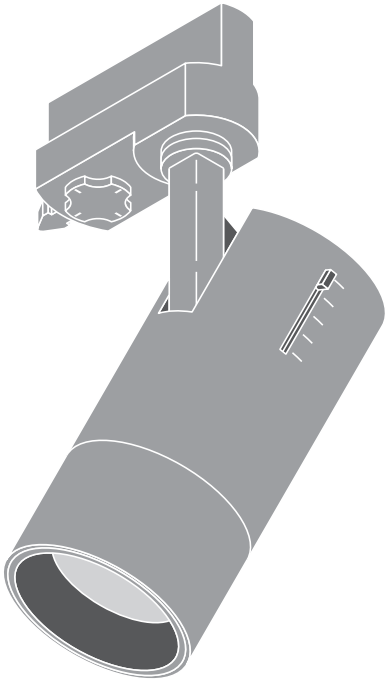

	EAN	Ø x h [mm]	W	V_{AC}	Hz	lm	lm/W	K
TR SP ZOOM D85 25W/3000K DIM 97R WT	4058075335769	85 x 265	25	120-240 V	50/60 Hz	1500	60	3000
TR SP ZOOM D85 25W/4000K DIM 97R WT	4058075335783	85 x 265	25	120-240 V	50/60 Hz	1500	60	4000
TR SP ZOOM D85 25W/3000K DIM 97R BK	4058075335806	85 x 265	25	120-240 V	50/60 Hz	1500	60	3000
TR SP ZOOM D85 25W/4000K DIM 97R BK	4058075335820	85 x 265	25	120-240 V	50/60 Hz	1500	60	4000

	EAN	IP	IK	▽	R_a	🌡 (°C)	PF	🏋
TR SP ZOOM D85 25W/3000K DIM 97R WT	4058075335769	20	03	15°- 55°	97	-20...+40	0.9	1.0 kg
TR SP ZOOM D85 25W/4000K DIM 97R WT	4058075335783	20	03	15°- 55°	97	-20...+40	0.9	1.0 kg
TR SP ZOOM D85 25W/3000K DIM 97R BK	4058075335806	20	03	15°- 55°	97	-20...+40	0.9	1.0 kg
TR SP ZOOM D85 25W/4000K DIM 97R BK	4058075335820	20	03	15°- 55°	97	-20...+40	0.9	1.0 kg

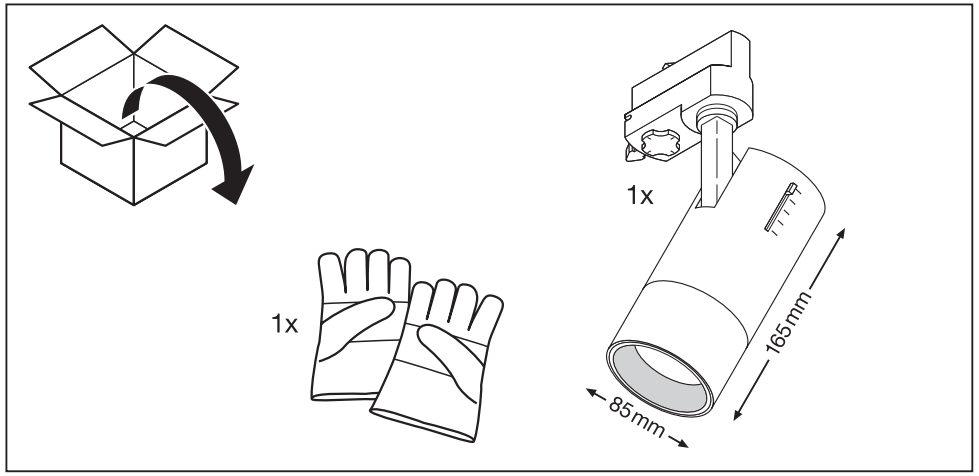
1x
1x
165mm
85mm

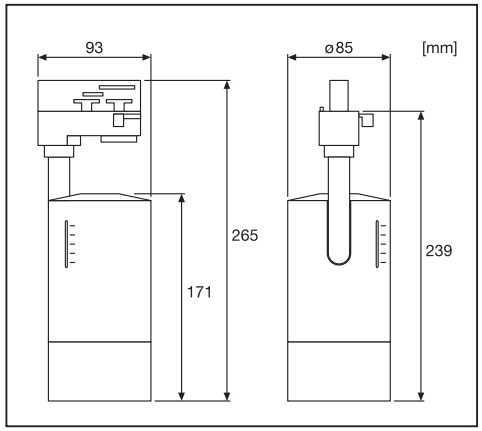
93
ø85
[mm]
265
171
239

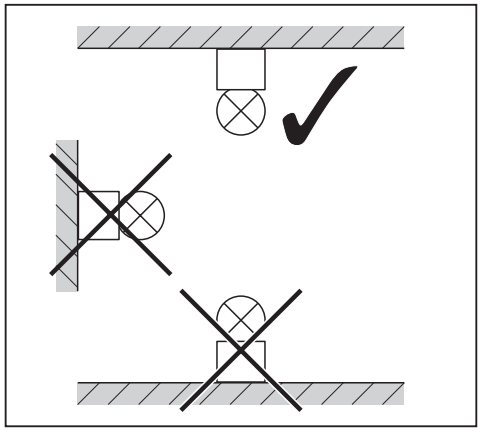

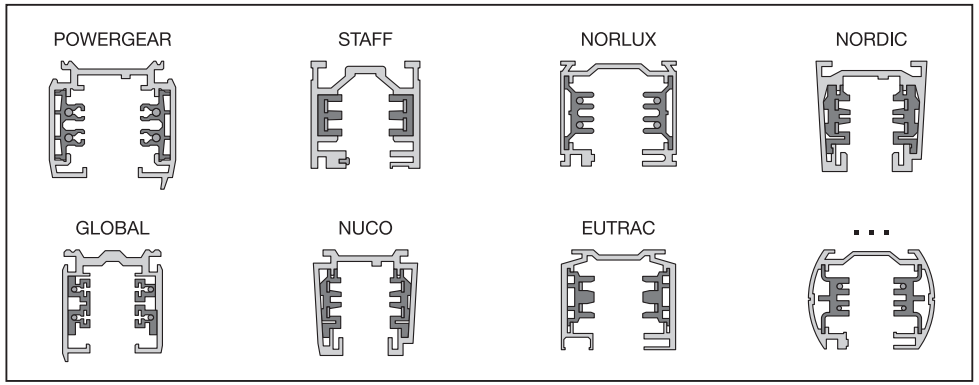
POWERGEAR
STAFF
NORLUX
NORDIC
GLOBAL
NUCO
EUTRAC
...

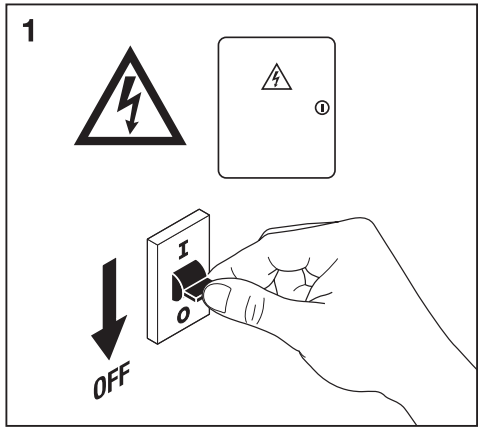
1
OFF

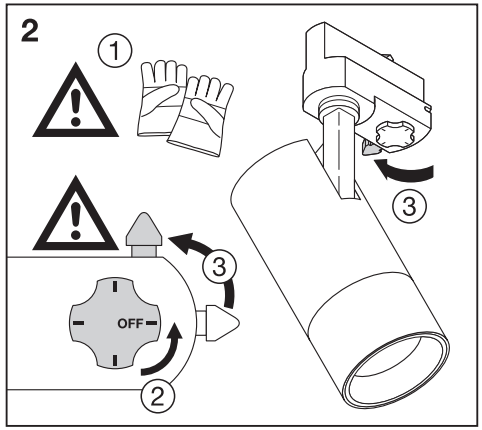
2
1
2
3
3
OFF

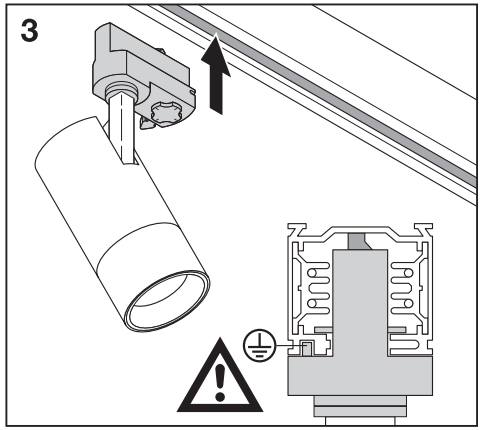
3

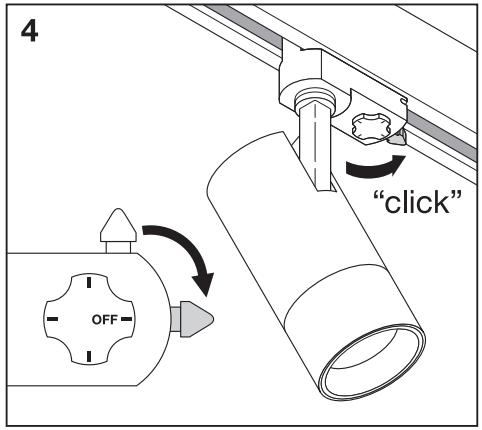
4
"click"
OFF

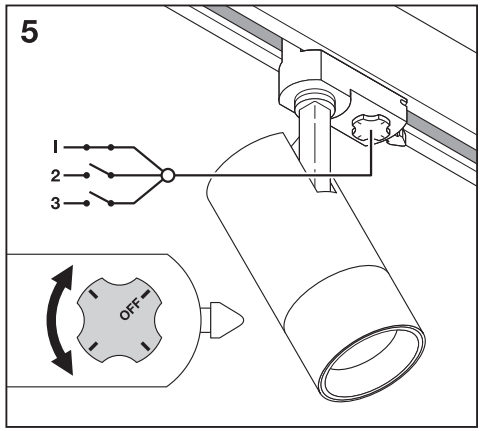
5
1
2
3
OFF

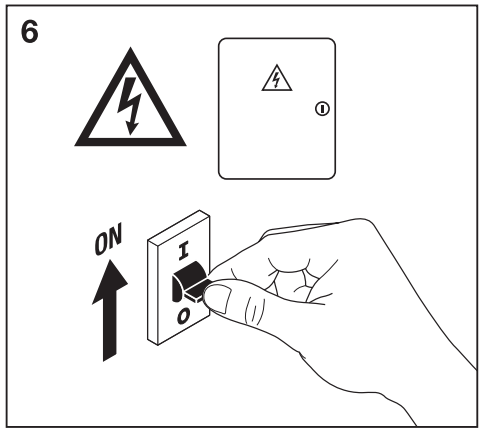
6
ON